spare parts -> profzip.com



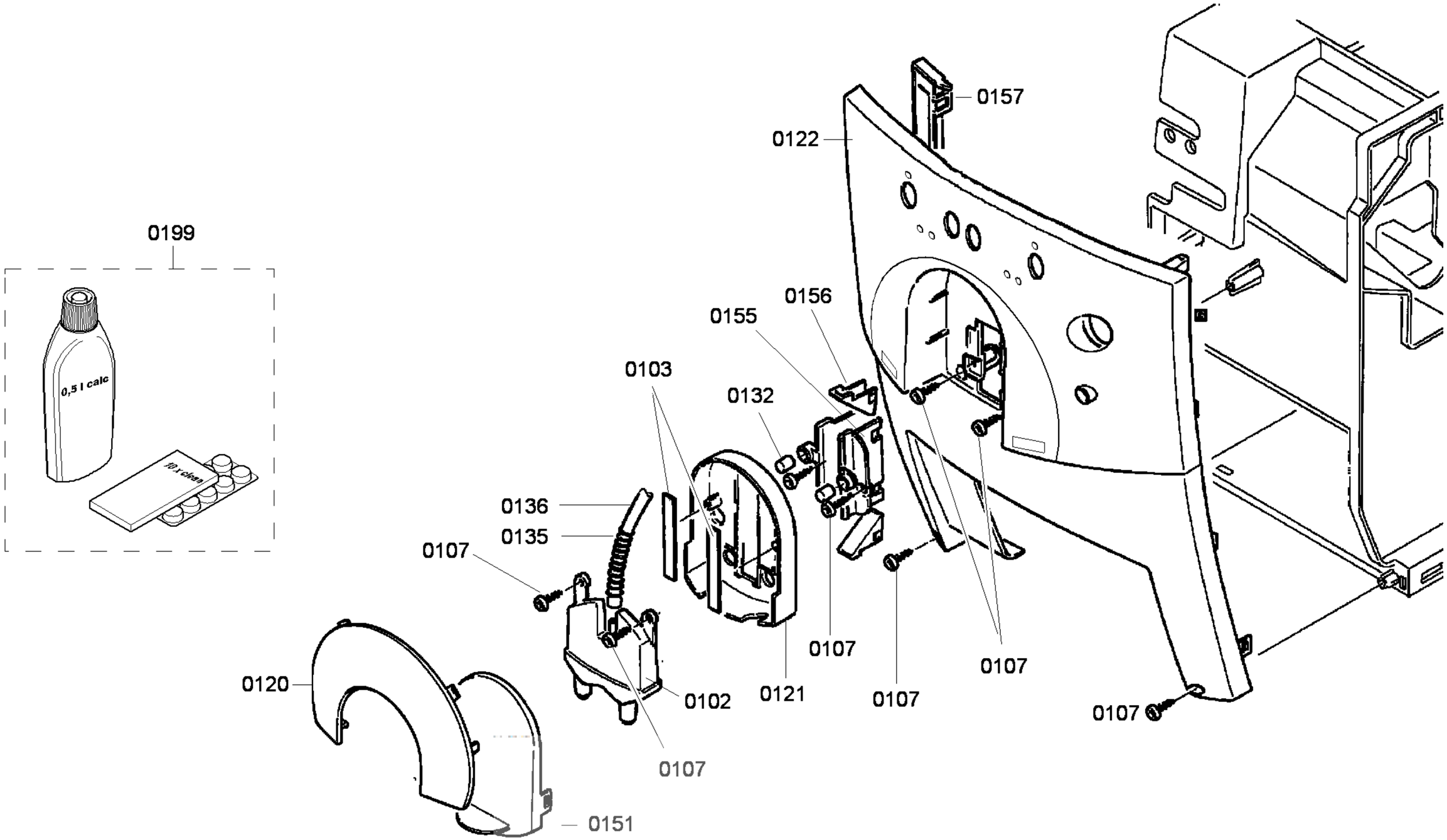

spare parts -> profzip.com



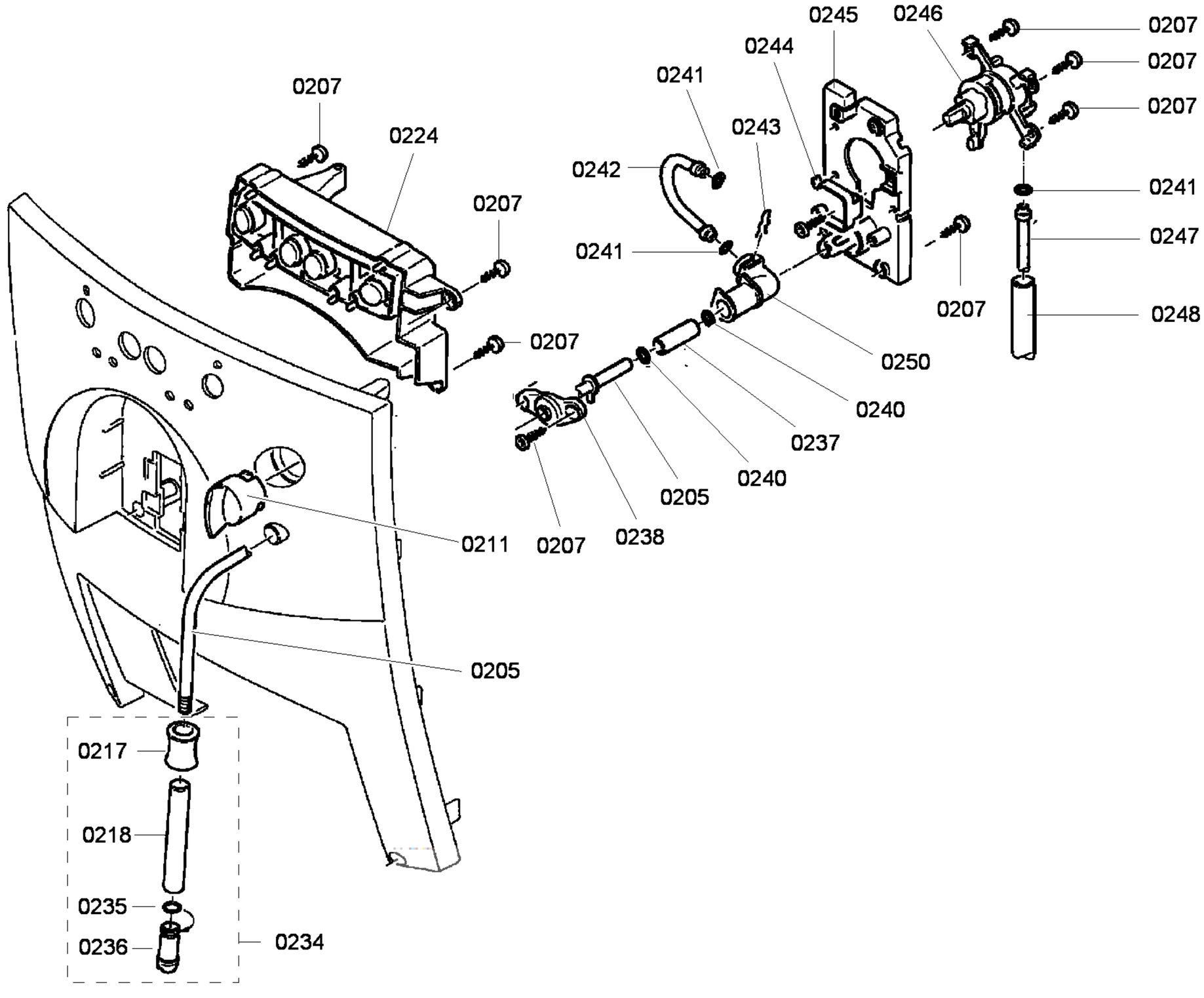

spare parts -> profzip.com



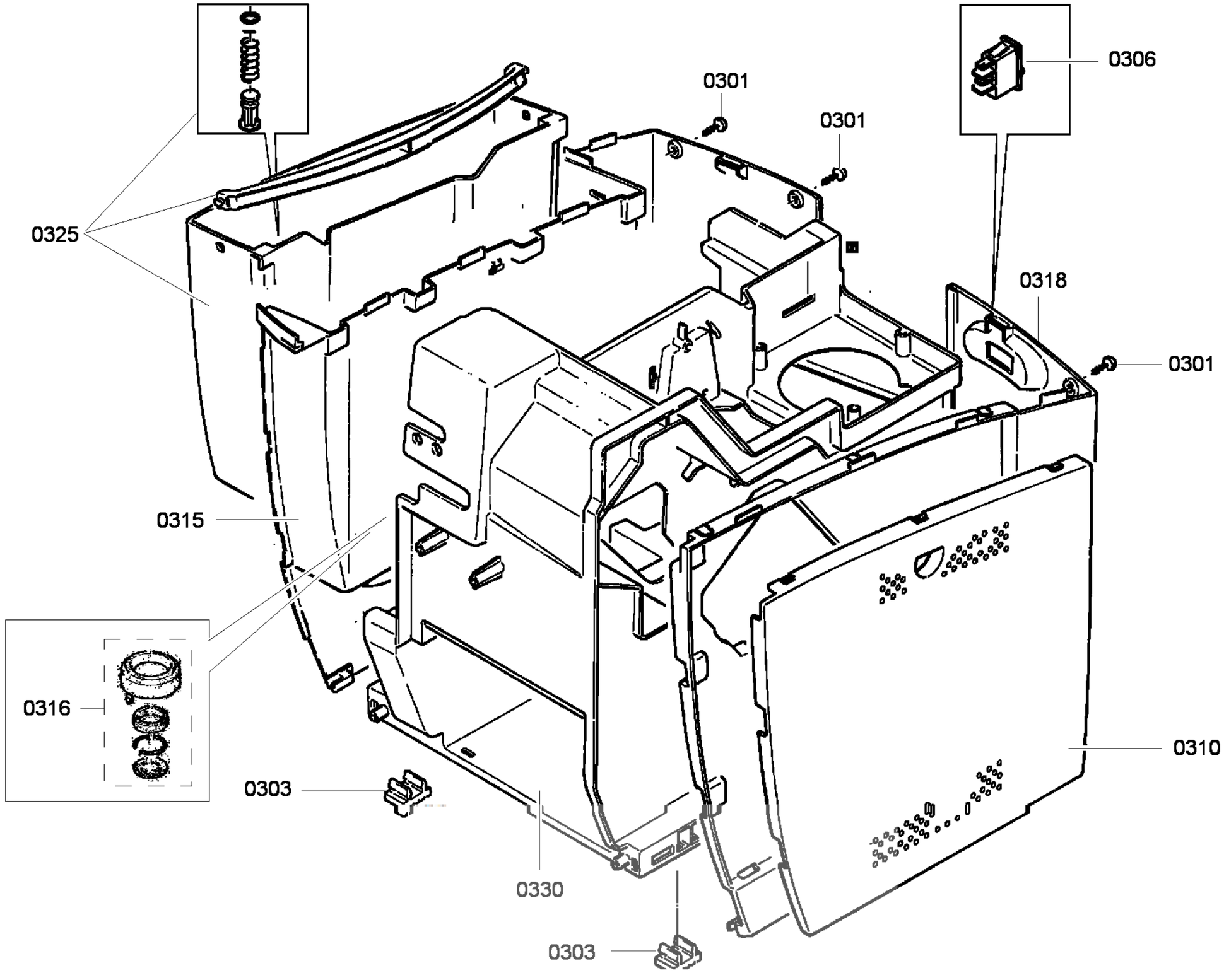

spare parts -> profzip.com



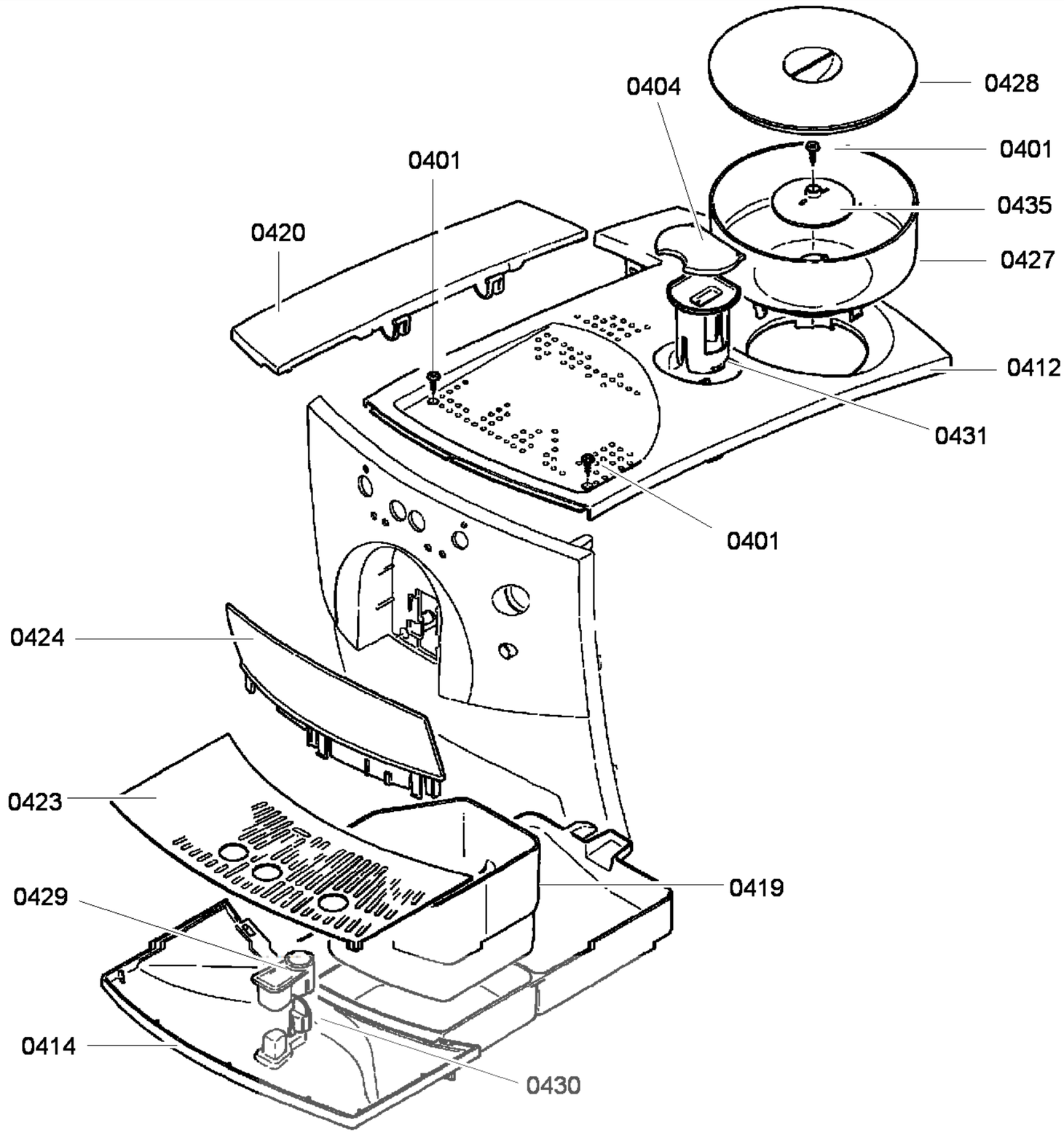

spare parts -> profzip.com



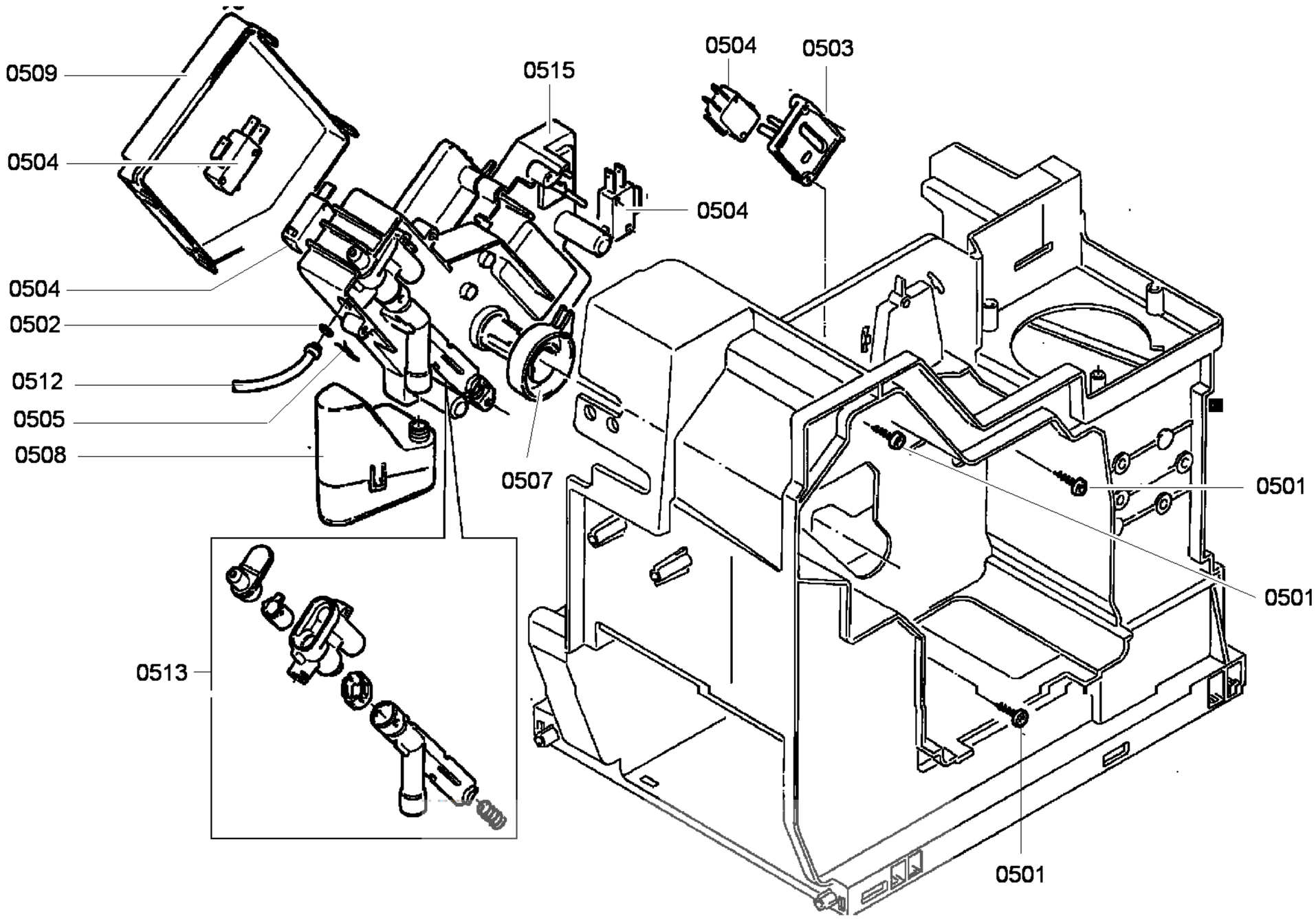

spare parts -> profzip.com



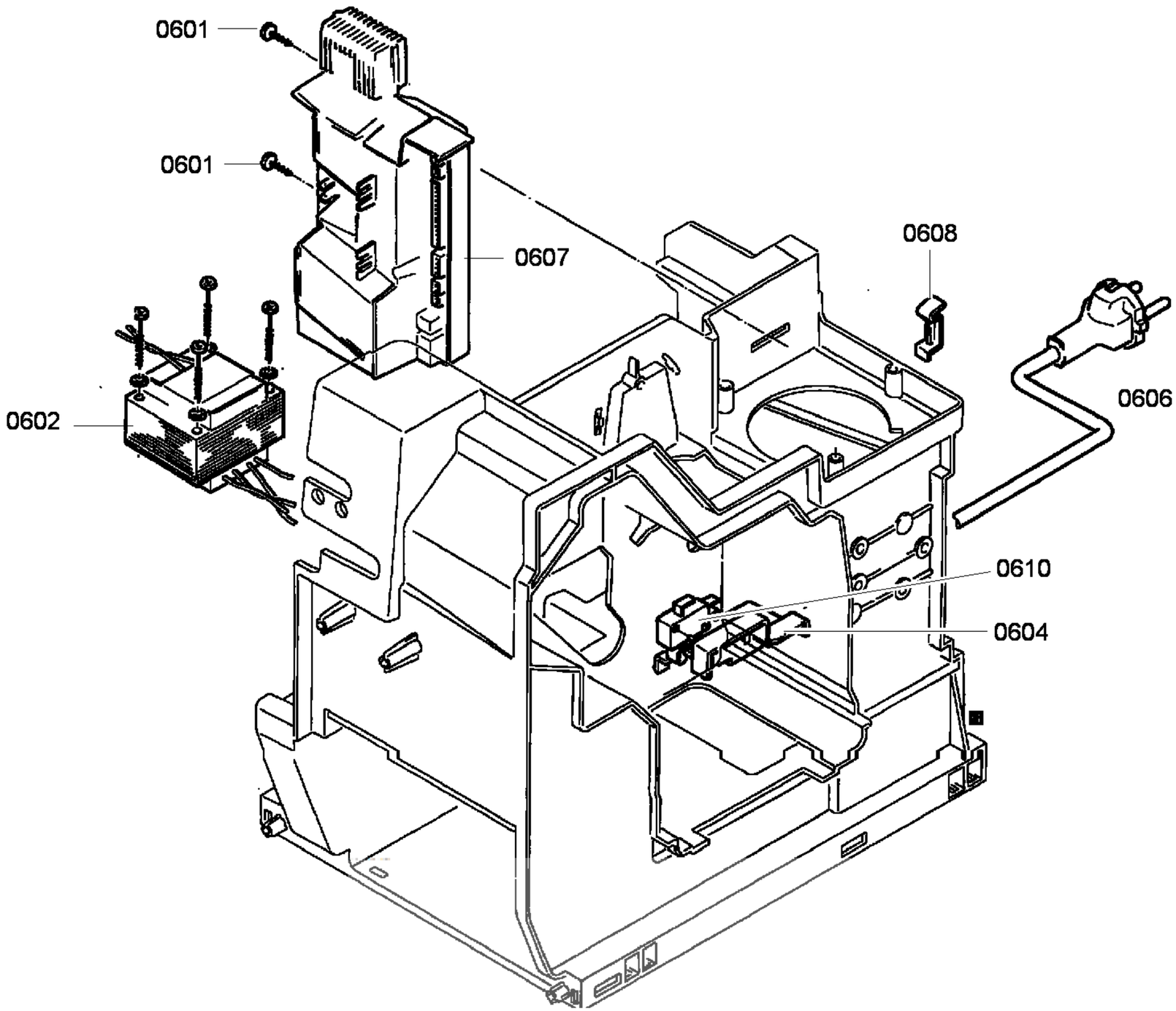

spare parts -> profzip.com



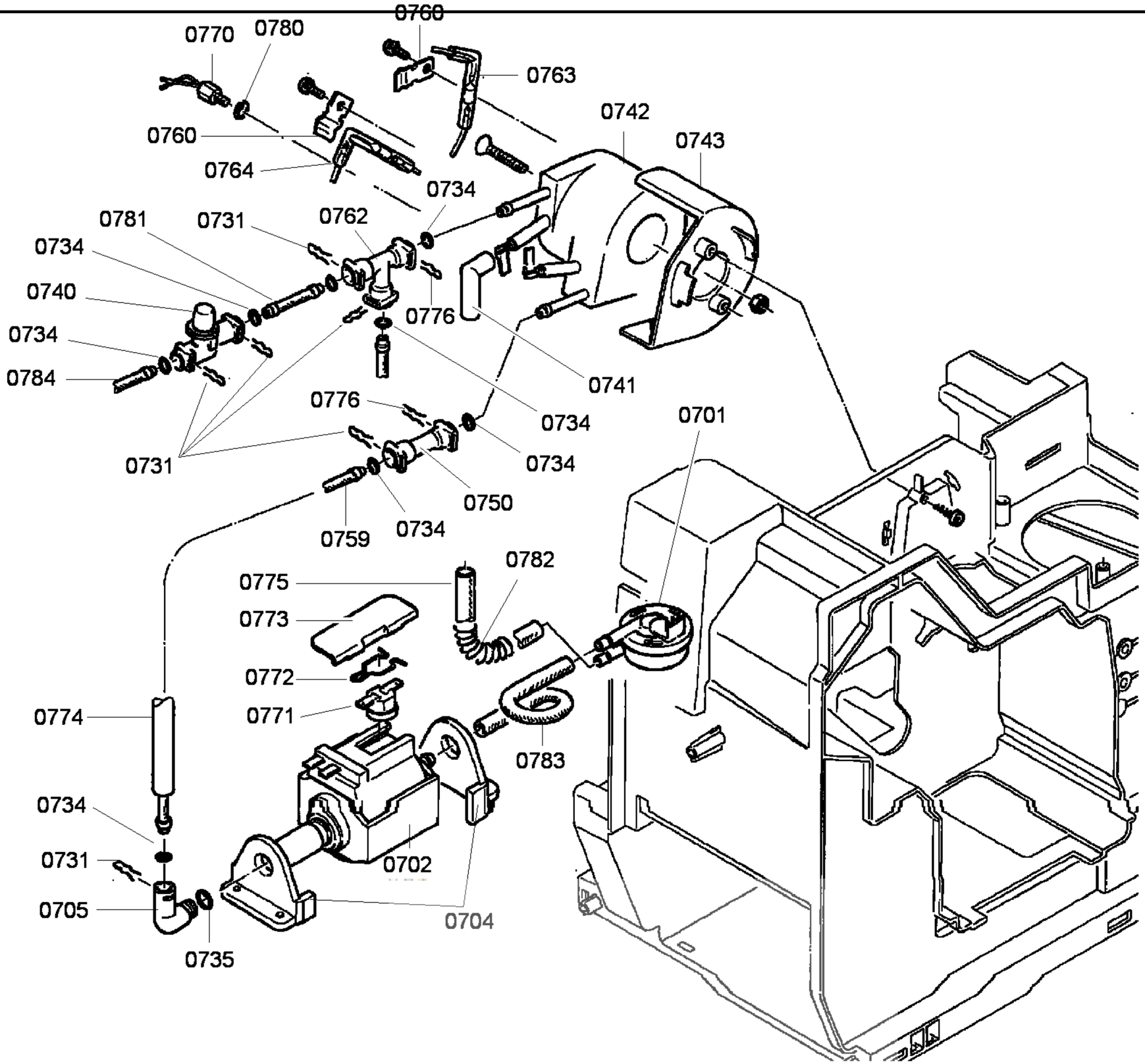

spare parts -> profzip.com



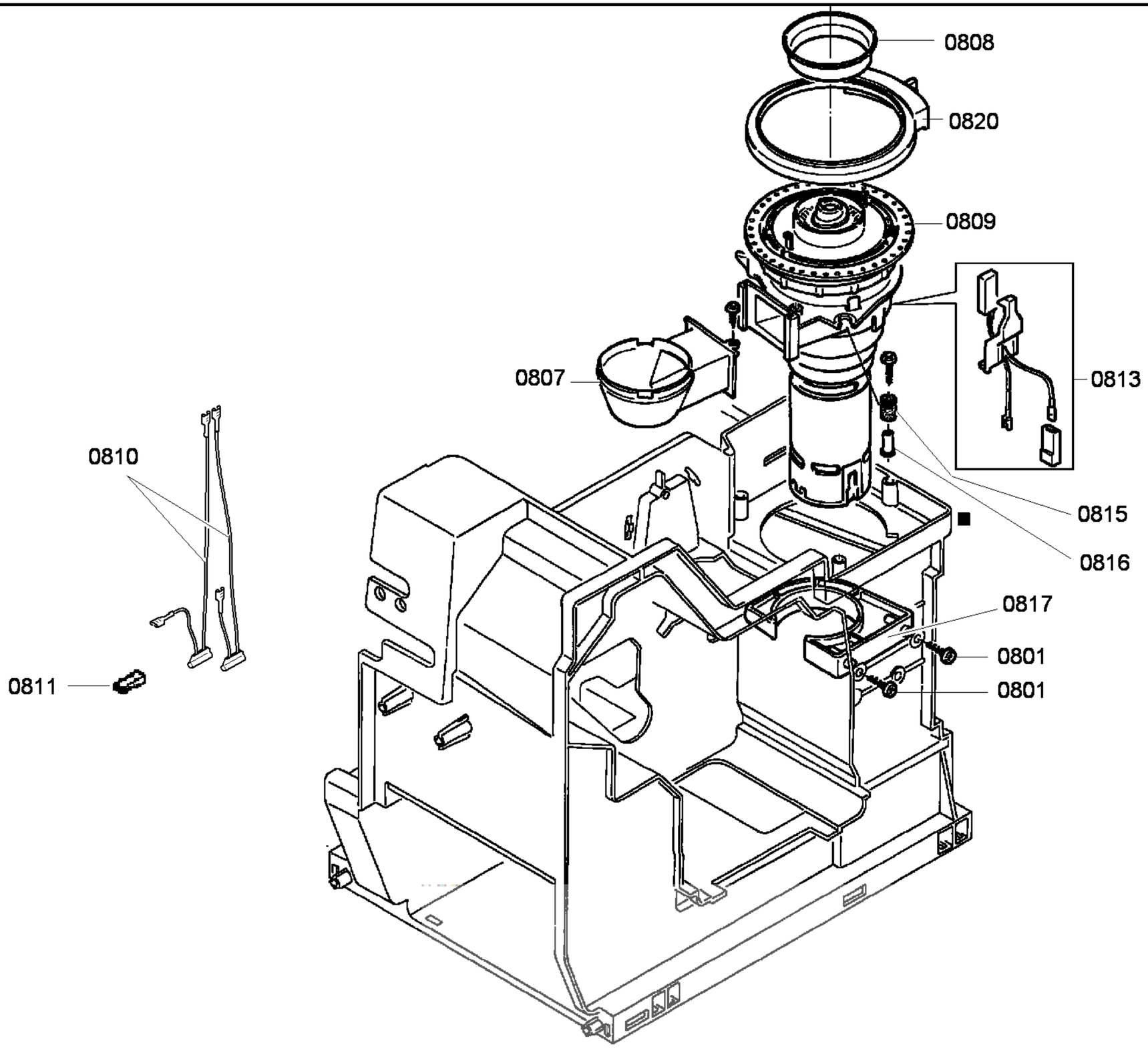
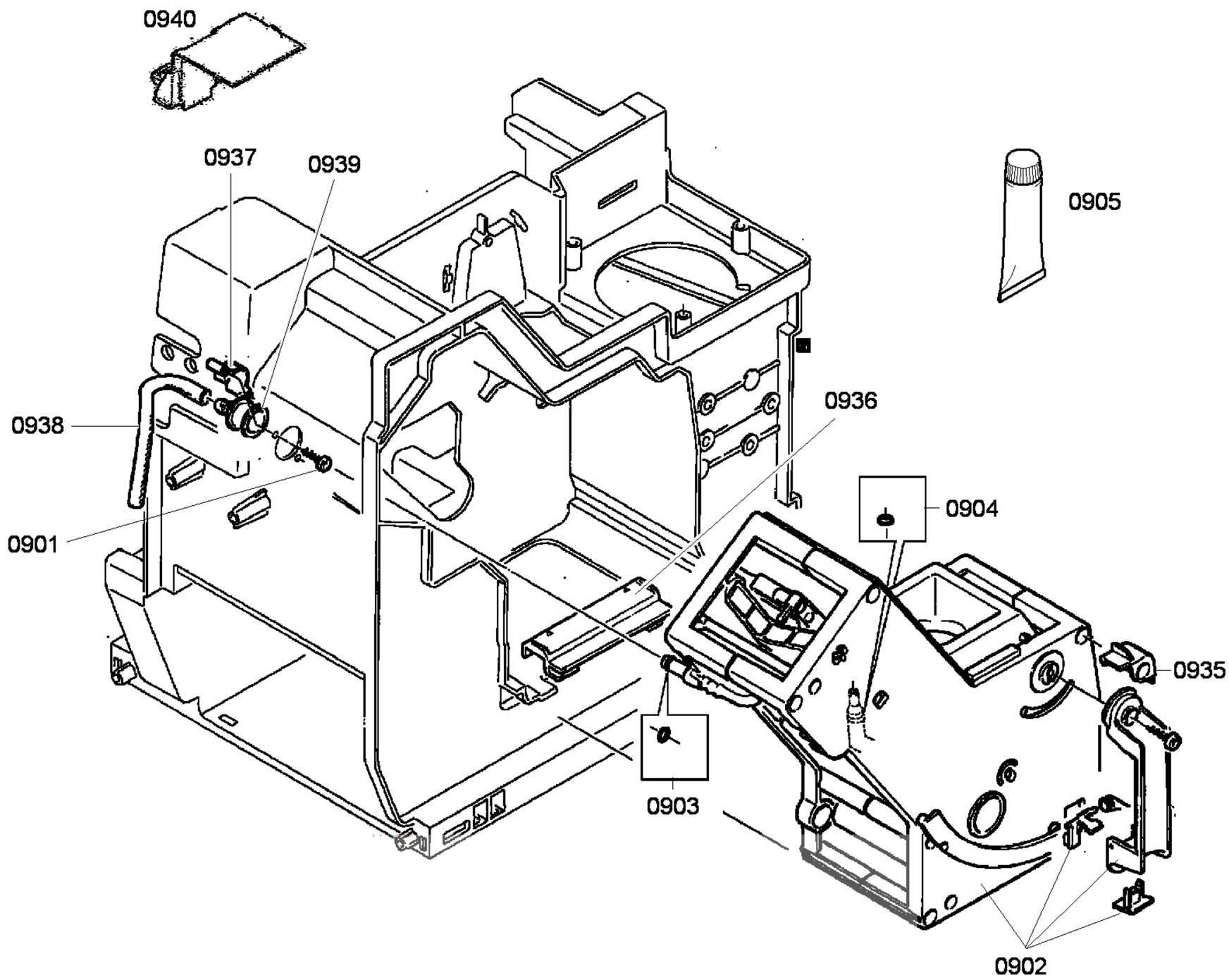
spare parts -> profzip.com